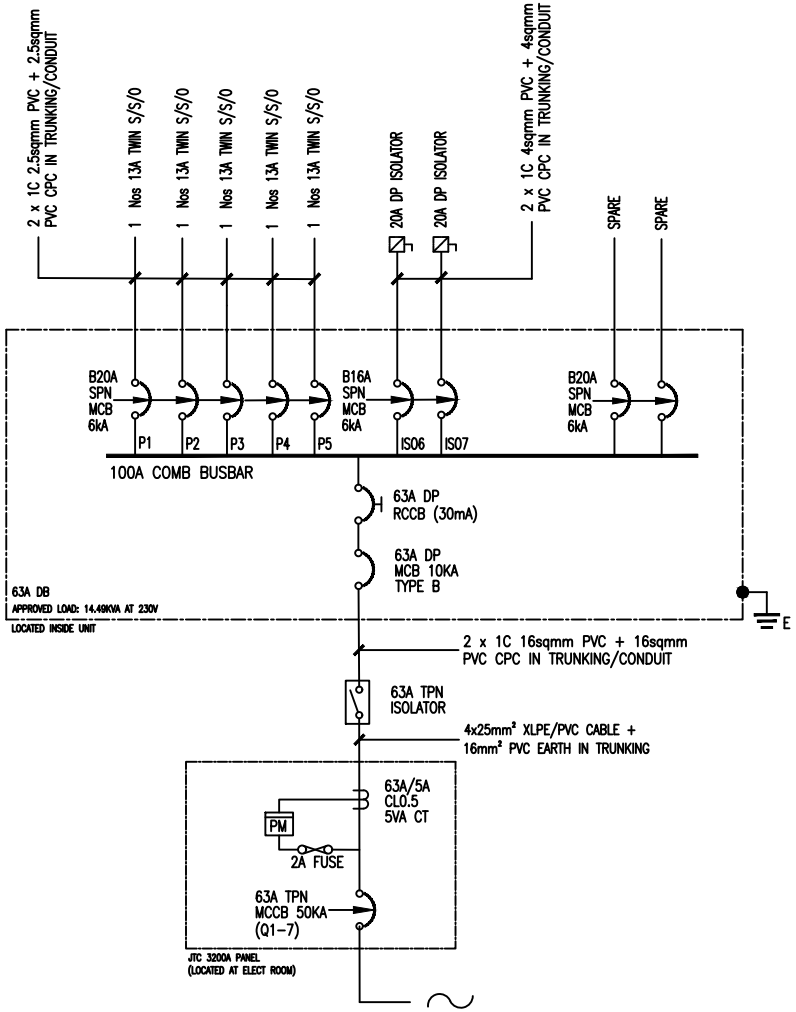

CLIENT / ADDRESS :	MAIN CONTRACTOR :	ELECTRICAL CONTRACTOR :	DRAWING TITLE :	LEW :	CHECKED :	DATE :
HERB & TEA FUTUROLOGY PTE LTD 20 BIOPOLIS WY, B1-10E,LAB 5 SINGAPORE 138668	E - BEST IDEA	I2R M&E PTE. LTD. 709 Yishun Avenue 5 #01-K1 Singapore 760709 TEL: 9777 1983	SINGLE LINE DIAGRAM (SLD)	Ryan, Nyap Junn Yean EMA Licence No. : 8/33613	Ryan	28 APR 2025
					DRAWING NO. : I2R-HTF-SLD	REV : 0